Maintenance of Visual Stability in the Human Posterior Parietal Cortex

Erik Chang[1,2] and Tony Ro[2]

Abstract

■ Visual stability refers to our stable visuospatial perceptions despite the unstable visual input caused by saccades. Functional neuroimaging results, studies on patients with posterior parietal cortex (PPC) lesions, and single-unit recordings in the lateral intraparietal sulcus of primates indirectly suggest that the PPC might be a potential locus of visual stability through its involvement with spatial remapping. Here we directly explored the role of the PPC in visual stability by applying transcranial magnetic stimulation (TMS) while participants performed a perisaccadic displacement detection task. We show that TMS over the PPC but not a frontal control site alters sensitivity to displacement detection when administered just before contralateral saccades and that a general impairment in attention or in the perception of apparent motion cannot account for the decreased sensitivity. The specific relationship between the timing of TMS and saccade direction demonstrates that saccadic suppression of displacement (SSD) is likely a consequence of noisy contralateral spatial representations in the PPC around the time of a saccade. The same mechanism may keep the unstable visual world in the temporal proximity of saccades from reaching our consciousness. ■

INTRODUCTION

Both eye and object movements cause images to move on the retina. Although object movements almost always induce vivid perceptions of displacement or motion, saccades (rapid eye movements) do not. To maintain visual stability (i.e., a stable visuospatial perception before, during, and after saccades), neural mechanisms have to distinguish between displacements in retinal images caused by object movements from those due to saccades. These neural mechanisms must also compensate for any object motion and/or saccade-induced changes of retinal images when computing a conscious representation of space (for comprehensive reviews, see Bridgeman, van der Hejiden, & Velichkovsky, 1994; Matin, 1986; Mackay, 1973). Although various theoretical accounts of visual stability have been proposed during the past two centuries (Bridgeman et al., 1994; von Helmholtz, 1925; Holt, 1903; Dodge, 1900), the underlying neural mechanisms responsible for our stable visual percepts are poorly understood.

To process the perceptual consequences of saccades, neural mechanisms of visual stability could involve cortical areas that control saccades, areas that process the perception of object motion, and areas that integrate pre-saccadic and post-saccadic spatial representations. This means a widespread neural network could be recruited for visual stability: The cortical control of saccades involves regions in the frontal lobe (frontal eye field, supplementary eye field, and dorsolateral prefrontal cortex) and the parietal lobe (parietal eye field) (see Pierrot-Deseilligny, Milea, & Muri, 2004; Pierrot-Deseilligny, Ploner, Muri, Gaymard, & Rivaud-Pechoux, 2002, for reviews), motion perception in humans is processed in the middle temporal area (Huk, Ress, & Heeger, 2001; Bisley & Pasternak, 2000; Tootell et al., 1995; Watson et al., 1993), detecting changes in object position may require both spatial and nonspatial contextual analysis of visual input involving parahippocampal and retrosplenial cortices (Bar, 2004; Bar & Aminoff, 2003), and remapping of spatial representation across saccades involves both the parietal lobe and the extrastriate cortex (Merriam, Genovese, & Colby, 2003; Nakamura & Colby, 2002).

Among the numerous cortical areas where visual stability might occur, relatively strong evidence has implicated the importance and critical role of the posterior parietal cortex (PPC). Single-unit recordings in rhesus monkeys (Colby & Goldberg, 1999; Duhamel, Colby, & Goldberg, 1992) demonstrate that remapping of spatial representations occurs just before saccades in the lateral intraparietal sulcus of rhesus monkeys. Functional neuroimaging (Merriam et al., 2003) results suggest similar mechanisms to be occurring in the human PPC. Furthermore, studies on patients with PPC lesions (Heide & Kompf, 1998; Heide, Blankenburg, Zimmermann, & Kompf, 1995; Duhamel, Goldberg, &

[1]University of Western Ontario, [2]Rice University

© 2007 Massachusetts Institute of Technology

Fitzgibbon, 1992) demonstrate deficits in double-step saccades, indicating failures in remapping spatial locations when making saccades. Finally, transcranial magnetic stimulation (TMS) over the right PPC reportedly[1] induces hypometric second saccades in the double-step saccade task (van Donkelaar & Muri, 2001), which mimics the performance of patients with PPC lesions. These pieces of evidence strongly suggest that the PPC is crucial for maintaining a coherent spatial representation across saccades for accurate visuomotor performance. However, they do not directly address the question of whether the PPC contributes to the subjective and stable spatial perception immediately before, during, or after saccades. To resolve this issue, in this study, we examined subjective visuospatial percepts around the time of saccades and assessed the contributions the PPC makes in generating these stable percepts.

Saccade-related perceptual changes mainly result in the reduction of various types of visual sensitivity (see Volkmann, 1986, for a comprehensive review). Such ''saccadic suppression'' filters from awareness any temporary changes in luminance (Latour, 1962), contrast (Volkmann, Riggs, White, & Moore, 1978), and position (Latour, 1962) during saccades. Among different types of saccadic suppression, saccadic suppression of displacement (SSD) is the most powerful one (Bridgeman & Fisher, 1990; Stark, 1976; Latour, 1962). This may be evolutionarily significant because displacement of the retinal image is the most salient perisaccadic event (Bridgeman & Fisher, 1990). The current study investigates how perisaccadic perceptual sensitivity, as assessed by modulations in SSD, is modulated when TMS disrupts processing in the PPC. SSD has been hypothesized to be the perceptual mechanism that prevents unstable spatial information from entering conscious awareness around the time of saccades (Bridgeman et al., 1994; Volkmann, 1986; Matin, 1982; Bridgeman, Hendry, & Stark, 1975). We predict that if the PPC indeed integrates eye position and object location to achieve visual stability, interrupting the PPC around the time of saccades will modulate the sensitivity to detect perisaccadic displacements depending on the direction of saccades.

EXPERIMENT 1

Methods

Participants

After informed consent, following the guidelines approved by the institutional review board of Rice University, 10 participants were recruited for this TMS experiment (5 men and 5 women; mean age = 20.9 years, range = 18–26 years). All participants reported having normal or corrected vision and no history of any neurological or psychiatric disorders at the time of testing.

Materials

All stimuli were 1 × 1° squares presented on a 17-in. Sony Trinitron 220GS CRT (60 Hz vertical retrace rate) at a distance of 50 cm from the participant's eyes. At the beginning of a trial, the initial fixation target appeared at 10° eccentricity in the left or right visual field simultaneously with the displacement probe at the midline. After a randomly selected duration between 1500 and 2000 msec, the saccadic target appeared at the mirror position of the initial fixation in the opposite visual field. The participant was asked to generate a saccade toward the saccadic target and to maintain fixation there until the end of the trial. The initial fixation, the saccadic target, and the displacement probe were erased during the vertical retrace frame immediately after the velocity of the eye movement exceeded 30°/sec (see Figure 1). On the critical displacement trials, which comprised two thirds of the trials, the displacement probe reappeared at a new position 2° leftward or rightward from the original position.[2] On these displacement trials, the displacements were either in the same or opposite direction of the saccades. The displaced probe was not erased until 1000 msec after the onset of the saccadic target (Figure 1). The remaining one third of the trials were no-displacement trials, where the probe reappeared at the same initial position before saccadic onset. Following

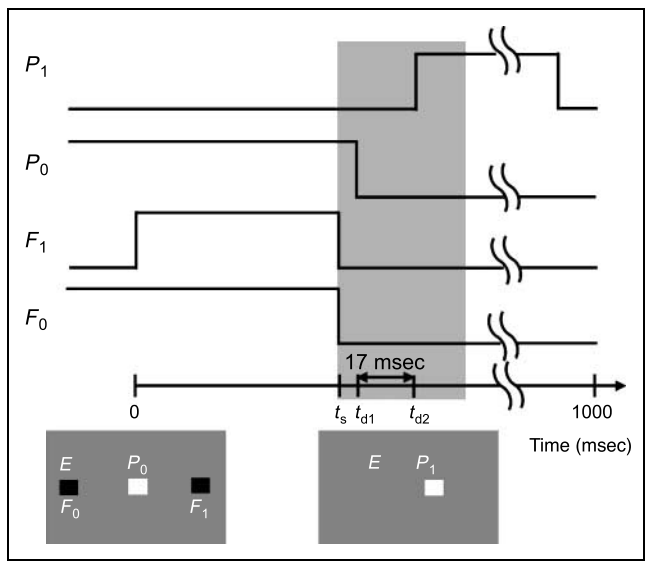

Figure 1. A schematic of the paradigm used in these experiments. P_0, P_1, F_0, and F_1, represent the time course of the initial probe position, end probe position, initial fixation, and the saccadic target, respectively. The zero on the timeline indicates the onset of the saccade target. The shaded area indicates the duration of saccades, starting at saccade onset (t_s). The probe was erased from P_0 at t_{d1} and was redrawn at P_1 at t_{d2}. t_{d1} occurred during the vertical refresh frame immediately after saccade onset. The duration between t_{d1} and t_{d2} was 17 msec on average. The two gray insets at the bottom illustrate the relative positions of the stimuli and the eye (E) at the onset of saccade target (left) and after the onset of saccade (right).

the saccade, a tone was presented to signal the participant to verbally respond ''yes'' or ''no'' regarding whether a displacement was perceived or not. A trial was discarded if its primary saccade magnitude fell out of the range between 15° and 25°, and the same condition was replaced in the pool of trials for later selection. The TMS pulse, when delivered, occurred at 50, 100, or 150 msec after the onset of the saccade target. Each participant performed at least, depending on the number of errors, 20 trials in each combination of TMS time (no TMS, 50, 100, and 150 msec) and saccade direction (leftward and rightward) for the displacement trials (160 trials in total), and at least 10 trials in each combination for the no-displacement trials (80 trials in total), which amounts to at least 240 trials for each TMS site.

Eye Movement Recording

An Applied Science Laboratories (Bedford, MA) Eye-Trac 210 operating at a sampling rate of 1000 Hz was used to record the position of the participant's left eye with spatial precision of approximately 1°. Head movements were restricted by a chin-rest. The eye position signals were analyzed on-line for the detection of the primary saccade on every trial. The algorithm detecting the saccade onset first smoothed the data by a 250-Hz low-pass temporal filter and took the first-order differentiation of the smoothed eye positions as velocity. Saccade onset was defined as the first time point when the velocity exceeded 30°/sec. The probe displacement was triggered at the vertical retrace frame after the retrace frame of the saccade onset detection. Therefore, probe displacement occurred an average of 17 msec after the saccade onset was detected.

Magnetic Stimulation

At the beginning of the experimental session, we localized the right motor hand area and determined the threshold intensity to elicit visible twitching of the left hand in each participant using a figure-eight coil connected to a Cadwell MES-10, polyphasic single-pulse magnetic stimulator. The full details of this localization procedure are described by Ro, Cheifet, Ingle, Shoup, and Rafal (1999). In short, the experimenter moved the focus of the figure-eight coil around the region a few centimeters to the right of the vertex. The most anterior position where the TMS induced the most robust contraction of the contralateral hand was defined as the motor hand area.[3] The output intensity of the TMS device was then decreased until a contraction of the contralateral hand was no longer visible and then increased until a contraction was again visible. The latter intensity setting was defined as the motor threshold for the figure-eight coil. A 9-cm circular coil was then applied over the located motor hand area, and the motor threshold for this larger coil was determined in the same fashion as with the figure-eight coil. The average motor threshold of the 10 participants with the circular coil was 33% of the stimulator's maximum output. In the SSD experiment, TMS was administered with the circular coil over the right PPC or a right frontal control site for a duration of 70 μsec at 110% of motor threshold. The flat surface of the coil was placed tangentially to the scalp. The handle of the coil pointed rightward and was oriented 90° perpendicular to the midsagittal plane. For the frontal site, the posterior edge of the coil was positioned 2 cm anterior to the hand area; whereas for the right PPC site, with TMS over area 5 and the intraparietal region, the anterior edge of the coil was positioned over the cortex 3 cm posterior and 2 cm lateral to the hand area. The placement of the coil over the right PPC site was the same as that in a previous study showing that the PPC integrates visual and tactile information (Ro, Wallace, Hagedorn, Farne, & Pienkos, 2004, see their Figure 5). The placement of the coil over the right frontal control site was slightly more posterior than that in Ro et al. (2004) to reduce blinking. Two other studies (van Donkelaar & Muri, 2001; Terao et al., 1998) also employed similar methods of localizing the PPC.

Although circular coils deliver stimulation to a broader area than most figure-eight coils, it still provides sufficient spatial specificity for determining whether the PPC or the frontal lobes are critical for SSD. Furthermore, because it is unclear which specific location within the PPC might contribute to SSD, delivering stimulation to a wider region will maximize the possibility of disrupting the relevant cortical mechanism. For future studies examining the contributions of specific subregions within the PPC to SSD, figure-eight coils in combination with frameless stereotactic systems (e.g., BrainSight) will provide more precise localization.

Results

Adjusted Hit Rates

Both hit rates and false alarms in each condition were arcsine-square-root transformed to avoid heterogeneity of variance across subjects in the analysis of variance (ANOVA).[4] The adjusted hit rates were calculated by subtracting the transformed false alarm rates from the transformed hit rates, and were subject to a three-way (2 × 4 × 2 [TMS Site × TMS Time × Saccade Direction]) repeated measures ANOVA. The main effect of saccade direction was significant [$F(1,9) = 8.71$, $p < .05$], with higher hit rates for rightward (.51) than for leftward (.34) saccades. More importantly, the magnitude of SSD was systematically affected when TMS was delivered over the PPC just before a contralateral saccade, as revealed by the significant three-way interaction among TMS site, TMS time, and saccade direction [$F(3,27) = 3.19$,

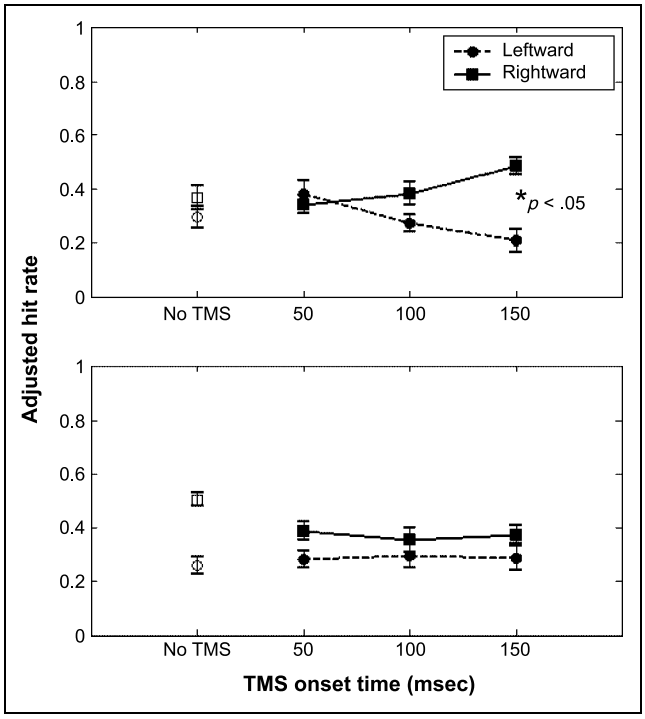

Figure 2. The adjusted hit rates for both saccade directions at each TMS timing and site. The circles and squares indicate leftward and rightward saccades, respectively. Empty symbols indicate the no TMS conditions. The error bars represent the within-subject standard error (Loftus & Masson, 1994).

$p < .05$] (Figure 2). To explore the nature of this interaction, two additional two-way ANOVAs with TMS time and saccade direction as the factors were conducted on the data from each TMS site. No effects were significant for the frontal TMS site. In contrast, the interaction between TMS time and saccade direction was significant for the parietal TMS site [$F(3,27) = 3.72, p < .05$]. Linear contrasts revealed that when TMS was applied over the parietal cortex at 150 msec after saccade target onset, and on average 122 msec before the saccade, there was a significant difference in the amount of SSD between leftward and rightward saccades. Displacements went undetected more than twice as often when the saccade was contralateral (.21) to the disrupted PPC as compared with ipsilateral saccades (.48) ($p < .001$). TMS did not affect the magnitude of SSD between the two saccade directions at any of the earlier timings.

Saccade Profiles

To ensure that the effect of TMS on SSD is not an epiphenomenon of altered saccade characteristics (such as decreased saccade magnitude or delayed saccade onset), we analyzed the relationship among three saccade characteristics (onset, duration, and magnitude; Table 1) and adjusted hit rates by calculating Pearson's correlation coefficients in two different ways. The first type of correlation is ''subject-based'' that treats every individual's adjusted hit rates in all of the conditions as one variable, and the corresponding three saccade characteristics, respectively, as the other variable. The resultant correlation coefficients indicate whether SSD linearly varies with any saccade characteristic across different conditions for each individual. Only two participants showed a significant correlation of SSD with different saccade characteristics (boldfaced coefficients in Table 2, ps $< .05$). It is thus unlikely that saccade characteristics linearly modulated the adjusted hit rates. In other words, the fact that SSD is stronger or weaker in some conditions than others cannot be attributed to variations in the saccades.

The second type of correlation is ''condition-based,'' which treats individual adjusted hit rates in each condition as one variable, and individual saccade onset, duration, or magnitude as the other variable when computing the correlation coefficient. The condition-based correlation coefficients inform us whether SSD and saccade

Table 1. Saccade Characteristics (Onset, Duration, and Magnitude) in Each Condition (Mean ± *SE*)

	Leftward				*Rightward*			
	No TMS	*50*	*100*	*150*	*No TMS*	*50*	*100*	*150*
Parietal								
Onset	270 ± 15	283 ± 15	247 ± 13	256 ± 14	266 ± 13	274 ± 15	272 ± 13	283 ± 14
Duration	86 ± 5	84 ± 6	82 ± 5	83 ± 5	86 ± 6	84 ± 5	89 ± 9	81 ± 5
Magnitude	19.4 ± 0.3	18.9 ± 0.4	19.2 ± 0.3	18.3 ± 0.5	19.6 ± 0.3	18.9 ± 0.4	19.4 ± 0.3	18.5 ± 0.5
Frontal								
Onset	267 ± 13	293 ± 17	257 ± 20	265 ± 17	278 ± 25	289 ± 18	282 ± 21	289 ± 15
Duration	81 ± 6	82 ± 5	77 ± 5	78 ± 6	76 ± 5	80 ± 5	80 ± 7	79 ± 5
Magnitude	19.4 ± 0.5	18.4 ± 0.6	18.0 ± 0.9	16.7 ± 0.8	19.1 ± 0.7	18.3 ± 0.6	19.4 ± 0.6	18.2 ± 0.6

Table 2. The "Subject-based" Pearson's Correlation Coefficients between Adjusted Hit Rates and the Saccade Characteristics

Participants	*Onset*	*Duration*	*Magnitude*
1	.02	−.49	**−.53**
2	−.44	.06	−.17
3	.27	−.16	−.46
4	.04	.03	−.26
5	.29	.18	−.28
6	−.36	−.29	.29
7	**−.67**	**−.72**	−.47
8	.38	−.01	**−.60**
9	.05	.01	.21
10	−.39	.09	.13
Mean	−.08	−.13	−.21

Significant coefficients are boldfaced.

characteristics are more strongly correlated in some conditions than in others (Table 3). The only significant correlations were between adjusted hit rate and saccade magnitude for leftward saccades when no TMS was administered in the frontal TMS block ($r = .62, p < .05$) and at 100 msec TMS in the parietal TMS block ($r = -.7$, $p < .05$). Because only two conditions showed significant correlations and these conditions do not match those showing TMS effects on adjusted hit rates (parietal TMS at 150 msec), it is unlikely that TMS secondarily modulates SSD by affecting saccade characteristics more strongly or weakly in some conditions than in other conditions. In summary, variations in saccade characteristics cannot explain the effect of TMS on SSD.

Discussion

In this experiment, we found time-specific effects of TMS over the right PPC that compromised sensitivity to perisaccadic displacements with saccades toward contralateral space. Compared with right frontal TMS, stimulation of the PPC 150 msec after target onset (i.e., 122 msec before the average onset of contralateral saccades) significantly increased the amount of saccadic suppression. Although the current results suggest that the PPC contributes to SSD, and thus visual stability, an alternative interpretation is that the TMS might have interrupted attentional processes in the PPC (Culham & Kanwisher, 2001), thereby reducing sensitivity to any event in contralateral space. In addition, recent neuropsychological (Battelli et al., 2001), fMRI, (Claeys, Lindsey, De Schutter, & Orban, 2003) and primate single-cell recording (Williams, Elfar, Eskandar, Toth, & Assad, 2003) studies have shown that the parietal cortex is also involved in apparent motion perception. To ensure that the effect of TMS over the right PPC during leftward saccades was because of perturbation of processes responsible for visual stability rather than transient lateralized interference with attention or with sensitivity to apparent motion, we conducted a control experiment to rule out these alternatives. We assessed sensitivity to probe displacement while participants maintained fixation under these same TMS timing and stimulation conditions. If TMS over the right PPC also compromises sensitivity to displacement during fixation, then an interpretation based on general attentional processes or sensitivity to apparent motion may be more accurate than one based on a remapping process. However, if TMS over the right PPC during fixation does not affect displacement detection, the perisaccadic effects measured in this experiment cannot be because of attention or apparent motion perception, but rather must be because of the contributions of the PPC in remapping and visual stability around the time of saccades.

EXPERIMENT 2

This control experiment tested the ability of participants to detect probe displacements during fixation while receiving TMS over the PPC.

Methods

Participants

We recruited four participants (three men and one woman; mean age = 23.5 years, range = 20–27 years), following the same protocol and exclusion criteria as Experiment 1.

Table 3. The "Condition-based" Pearson's Correlation Coefficients between Adjusted Hit Rates and the Saccade Characteristics

	Leftward				*Rightward*			
	No TMS	*50*	*100*	*150*	*No TMS*	*50*	*100*	*150*
Parietal								
Onset	−.32	−.04	.29	−.04	.59	−.13	.43	.18
Duration	−.21	.44	−.59	−.36	−.44	−.14	.28	−.12
Magnitude	.16	.38	**−.70**	.18	−.25	.14	−.17	.08
Frontal								
Onset	−.10	.46	−.22	.55	−.24	.36	−.20	.53
Duration	−.21	−.02	−.11	.20	−.31	.11	−.52	.07
Magnitude	**.62**	.01	−.06	.21	.37	.23	−.16	.04

Significant coefficients are boldfaced.

Materials and Procedures

The same materials, apparatus, and stimuli as Experiment 1 were used. The average motor threshold of these participants was 39.5% of the maximum stimulator output (circular coil), and the average intensity of stimulation over the PPC was 43.5%. The behavioral task was also the same as Experiment 1 except for the following changes: Participants maintained fixation on the initial fixation target at 10° eccentricity throughout the trial, and the probe was displaced 266 msec after the second black square appeared at the mirror position from the first one. The timing of displacement was set to match the average saccade onset measured in Experiment 1. Because this experiment served as a control to ensure that TMS over the PPC does not impair displacement detection without saccades, we applied TMS only over the PPC in this experiment. As in the first experiment, participants reported whether they detected the probe displacement or not at the end of every trial.

Results and Discussion

The adjusted hit rates were computed and subjected to a 2 (fixation position: right/left) × 4 (TMS timing: no TMS/50/100/150 msec) repeated measures ANOVA. Neither of the main effects nor the interaction reached significance (all $ps > .05$). As shown in Figure 3, all participants performed nearly perfectly in every condition. In the first experiment, adjusted hit rates significantly differed between leftward and rightward saccades at the 150-msec PPC TMS onset condition (Figure 2). There was no trend or tendency for a similar pattern of data in this experiment. Based on these results, it is unlikely that the TMS that affected SSD in Experiment 1 was simply a consequence of the perturbation of attentional mechanisms that decreased the overall sensitivity to events in the contralateral hemifield. An interpretation based on an impairment of the sensitivity to apparent motion is also unlikely. Experiment 2 thus effectively disambiguated the competing accounts for the parietal TMS effect in Experiment 1, and left visual stability as the most reasonable mechanism compromised by TMS of the PPC around the time of saccades.

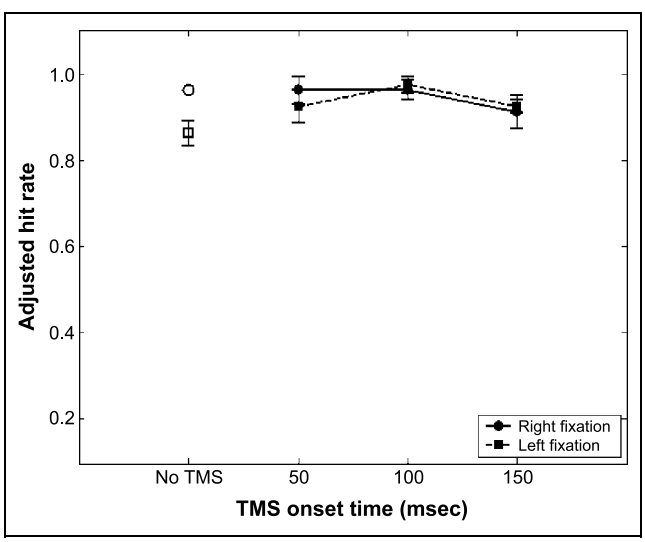

Figure 3. The adjusted hit rates for both fixation locations at each TMS timing. The symbols follow the same convention as those in Figure 2.

GENERAL DISCUSSION

In Experiment 1, we demonstrated time-specific effects of TMS over the right PPC that compromised sensitivity to perisaccadic displacements with saccades toward contralateral space. When participants maintained fixation and performed the same displacement detection task in Experiment 2, TMS over the right PPC had no impact on displacement detection. Thus, the PPC contribution to SSD in Experiment 1 was unlikely a general manifestation of compromised attention or sensitivity to displacement. Complementing studies showing a remapping process in the human parietal cortex (Merriam et al., 2003; Heide & Kompf, 1998; Heide et al., 1995), our results suggest that the PPC also maintains visual stability in subjective perception.

In our SSD paradigm, participants could have made judgments of displacement either by comparing the pre- and post-saccadic positions of the displacement probe or by detecting the transient shift of probe position (apparent motion) during saccades. The former requires integration of spatial representations across a saccade, the latter requires motion perception. It is unlikely that TMS influenced motion perception in this study because when participants made displacement detection judgments during fixation, TMS did not affect sensitivity to displacement in any way. In addition, none of our participants reported perceiving motion phosphenes. Therefore, the modulated perceptual judgments of displacement were most likely a consequence of disrupted pre- and post-saccadic probe position comparisons. This raises the question of how TMS over the PPC makes saccadic suppression caused by contralateral saccades stronger than by ipsilateral saccades.

One possible explanation is that each PPC is involved with the integration of pre- and post-saccadic representations of space to maintain coherent percepts when saccades are made. An exemplar implementation of this process is an "optimal integration" model (Niemeier, Crawford, & Tweed, 2003), which successfully simulates several characteristics of SSD. This model proposes that the brain optimally integrates the retinal location of images and the sense of eye position from muscle spindles or motor commands to form an evolving representation

of the world. According to the optimal integration framework, SSD is an unavoidable side effect of imperfection in each source of information (Niemeier et al., 2003). Our results are consistent with this model and implicate the PPC in the neuronal implementation of optimal integration. Specifically, under normal circumstances in the critical condition of our experiment, the displacement probe is in the left visual field before the saccade (at time zero, or t_0) and the representation of its location [$r(t_0)$] is narrowly dispersed because the image is still. The signal of eye position [$c(t_0)$], however, is a relatively noisy one, simply reflecting the less precise nature of proprioceptive feedback or efference copy as compared with a visual signal (Li & Matin, 1990; Mack, 1970). These two sources of information compositely represent the allocentric coordinate of the probe [$a(t_0) = r(t_0) + c(t_0)$; Figure 4A]. Because a displacement is essentially a difference in spatial location at different time points, its detection relies on the discrimination between the old and new representations of spatial location, namely between $a(t_0)$ and $a(t_1)$. The larger the extent of overlap between these two representations, the less likely a displacement is detected (Figure 4C). As the eyes start moving contralaterally, both signals become noisier than during fixation because the retinal receptors are relatively unstable, and the eye movement may not be perfectly smooth. Consequently, the composite signal $a(t_1)$ is also noisier and more widely dispersed (Figure 4B). We hypothesize that the magnitude of SSD reflects the extent of overlap between $a(t_1)$ and $a(t_2)$ (Figure 4C). Our results suggest that TMS of the PPC before the initiation of contralateral saccades increases the variability in $a(t_0)$ and $a(t_1)$, and thus increases the overlap between these two distributions (Figure 4D–E). Thus, by externally introducing noise with TMS (Pascual-Leone, Walsh, & Rothwell, 2000) into the PPC signals used for optimal integration, we further reduced the sensitivity to displacement.

In our experimental paradigm, the transaccadic integration of spatial representation occurred in peripheral vision, where the parietal cortex has more vigorous responses (Baizer, Ungerleider, & Desimone, 1991). However, it has been found that SSD is stronger in the central visual field (Bridgeman & Fisher, 1990). This raises the question whether SSD in the central visual field is processed by the same mechanisms as SSD in the peripheral visual field. As spatial representations are ubiquitous and widely distributed throughout the visual system, it is possible that other brain regions integrating spatial coordinates or visual memory across saccades may contribute to SSD. SSD in the central visual field, for example, may be processed by ventral stream visual areas, which contain a larger representation for the fovea than dorsal areas.

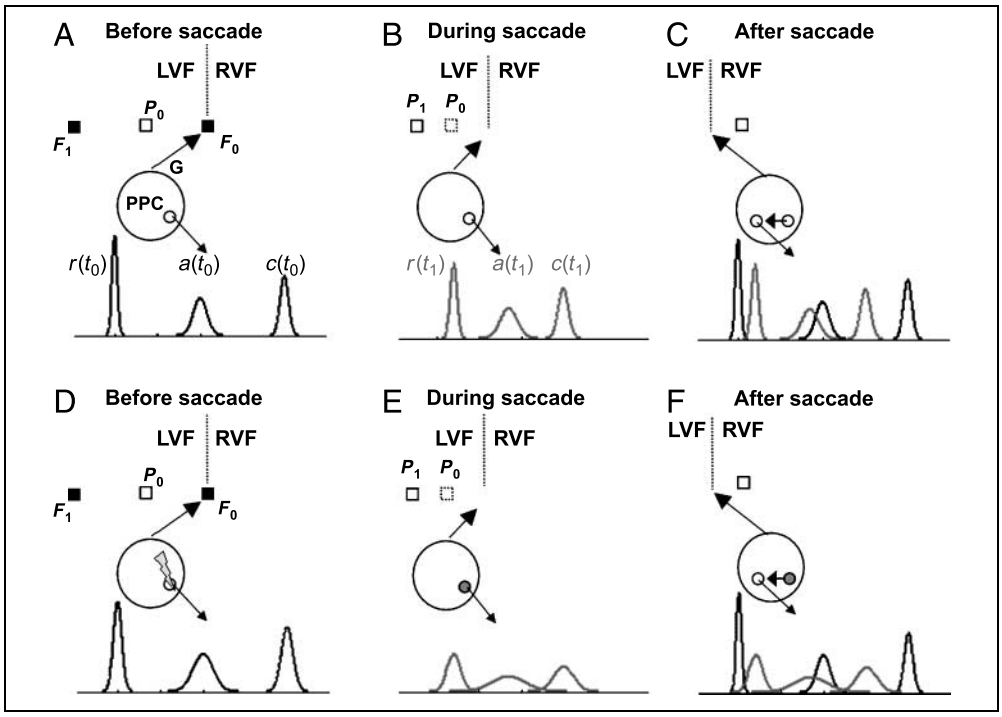

Figure 4. Spatial representation in the PPC without and with TMS. (A) Before saccade onset; the eyes fixate at the initial fixation (F_0), the retinal image [$r(t_0)$] of the displacement probe (P_0) and the signals of eye position [$c(t_0)$] conjointly represent the spatial location of the probe [$a(t_0)$]. (B) Once the saccade starts, the retinal image [$r(t_1)$] and the sense of eye position [$c(t_1)$] not only shift their centroid, but also become wider in distribution because of the increased noise. So is the case for their combination [$a(t_1)$]. (C) The representations of the old and new probe locations overlap and lead to the failure of distinguishing two locations, namely, SSD. (D, E) When TMS is applied over the PPC, all signals become even noisier. (F) Thus, the overlap between $a(t_0)$ and $a(t_1)$ increases compared to the no TMS situation, and SSD becomes stronger. LVF = left visual field; RVF = right visual field.

The current study advances the understanding of perisaccadic spatial perception by demonstrating not only that the right PPC contributes to visual stability, but also that SSD may not be simply a suppressive or attentional effect. Rather, these results suggest that visual information is represented with higher uncertainty around the time of saccades rather than being inhibited. Although a recent study found that the saccadic suppression of flash detection arises between the retina and V1 in the visual system (Thilo, Santoro, Walsh, & Blakemore, 2004), SSD may have neuronal loci different from suppression of flash detection because (1) detecting displacements requires spatial localization, which is not necessary for flash or phosphene detection, and (2) there is evidence showing that SSD may result from the peculiarity in spatial representation in the temporal vicinity of saccades (Matsumiya & Uchikawa, 2001; Morrone, Ross, & Burr, 1997).

To conclude, our results demonstrate that right PPC in humans is involved with the SSD. SSD may be a natural consequence of the noisy and uncertain representations of spatial location in the PPC around the time of saccades. We speculate that the left PPC is the functional homologue of the right PPC and it processes visual stability in the right visual field, but this is an empirical question for future study.

Acknowledgments

This research was supported by the NIH (T. Ro), the American Psychological Association Dissertation Research Award, and a Graduate Research Scholarship in Psychology from the American Psychological Foundation and the Council of Graduate Departments of Psychology (E. Chang).

Reprint requests should be sent to Erik Chang, Department of Psychology, Social Science Centre, University of Western Ontario, Room 6256, London, Ontario, Canada N6A 5C2, or via e-mail: audachang@gmail.com.

Notes

1. Using the same methods and procedures, we have failed to replicate this result.
2. A pilot study examined the adjusted hit rates for 1°, 2°, and 3° displacements with the same paradigm as this study (but without applying TMS) and found that 2° displacements showed moderate levels of detection (hit rate = 0.43). We adopted this displacement distance to avoid ceiling or floor effects.
3. Motor-evoked potentials are sometimes used to determine the motor hand area threshold (Rossini, Rossi, et al., 1996; Rossini, Tecchio et al., 1996; Rossini et al., 1994). The visual inspection method, however, can determine the motor hotspot and threshold more quickly than the former and has been shown to provide a high correspondence with motor thresholds assessed with motor-evoked potentials (Ro et al., 2006; Stokes et al., 2005).
4. Because some subjects never produced any false alarms, and when they did it was unclear which direction/condition they were producing the false alarm in, the adjusted hit rates rather than d' were used for this study.

REFERENCES

Baizer, J. S., Ungerleider, L. G., & Desimone, R. (1991). Organization of visual inputs to the inferior temporal and posterior parietal cortex in macaques. *Journal of Neuroscience, 11,* 168–190.

Bar, M. (2004). Visual objects in context. *Nature Reviews Neuroscience, 5,* 617–629.

Bar, M., & Aminoff, E. (2003). Cortical analysis of visual context. *Neuron, 38,* 347–358.

Battelli, L., Cavanagh, P., Intriligator, J., Tramo, M. J., Henaff, M. A., Michel, F., et al. (2001). Unilateral right parietal damage leads to bilateral deficit for high-level motion. *Neuron, 32,* 985–995.

Bisley, J. W., & Pasternak, T. (2000). The multiple roles of visual cortical areas MT/MST in remembering the direction of visual motion. *Cerebral Cortex, 10,* 1053–1065.

Bridgeman, B., & Fisher, B. (1990). Saccadic suppression of displacement is strongest in central vision. *Perception, 19,* 103–111.

Bridgeman, B., Hendry, D., & Stark, L. (1975). Failure to detect displacement of the visual world during saccadic eye movements. *Vision Research, 15,* 719–722.

Bridgeman, B., van der Hejiden, A. H. C., & Velichkovsky, B. M. (1994). A theory of visual stability across saccadic eye movements. *Behavioral and Brain Sciences, 17,* 247–292.

Claeys, K. G., Lindsey, D. T., De Schutter, E., & Orban, G. A. (2003). A higher order motion region in human inferior parietal lobule: Evidence from fMRI. *Neuron, 40,* 631–642.

Colby, C. L., & Goldberg, M. E. (1999). Space and attention in parietal cortex. *Annual Review of Neuroscience, 22,* 319–349.

Culham, J. C., & Kanwisher, N. G. (2001). Neuroimaging of cognitive functions in human parietal cortex. *Current Opinion in Neurobiology, 11,* 157–163.

Dodge, R. (1900). Visual perception during eye movement. *Psychological Review, 2,* 193–199.

Duhamel, J. R., Colby, C. L., & Goldberg, M. E. (1992). The updating of the representation of visual space in parietal cortex by intended eye movements. *Science, 225,* 90–92.

Duhamel, J. R., Goldberg, M. E., & Fitzgibbon, E. J. (1992). Saccadic dysmetria in a patient with a right frontoparietal lesion. *Brain, 115,* 1387–1402.

Heide, W., Blankenburg, M., Zimmermann, E., & Kompf, D. (1995). Cortical control of double-step saccades: Implications for spatial orientation. *Annals of Neurology, 38,* 739–748.

Heide, W., & Kompf, D. (1998). Combined deficits of saccades and visuo-spatial orientation after cortical lesions. *Experimental Brain Research, 123,* 164–171.

Holt, E. B. (1903). Eye-movement and central anaesthesia. *Psychological Monographs, 4,* 1–45.

Huk, A. C., Ress, D., & Heeger, D. J. (2001). Neuronal basis of the motion aftereffect reconsidered. *Neuron, 32,* 161–172.

Latour, P. L. (1962). Visual threshold during eye movements. *Vision Research, 2,* 261–262.

Li, W., & Matin, L. (1990). The influence of saccade length on the saccadic suppression of displacement detection. *Perception and Psychophysics, 48,* 453–458.

Loftus, G. R., & Masson, M. E. J. (1994). Using confidence intervals in within-subject designs. *Psychonomic Bulletin and Review, 1,* 476–490.

Mack, A. (1970). An investigation of the relationship between eye and retinal image movement in the perception of movement. *Perception and Psychophysics, 8,* 291–298.

Mackay, D. M. (1973). Visual stability and voluntary eye movements. In R. Jung (Ed.), *Handbook of sensory physiology* (pp. 307–332). Berlin: Springer.

Matin, E. (1982). Saccadic suppression and the dual mechanism theory of direction constancy. *Vision Research, 22,* 335–336.

Matin, E. (1986). Visual localization and eye movements. In K. R. Boff, L. Kaufman, & J. P. Thomas (Eds.), *Handbook of perception and human performance* (vol. 2, pp. 20.1–20.45). New York: Wiley.

Matsumiya, K., & Uchikawa, K. (2001). Apparent size of an object remains uncompressed during presaccadic compression of visual space. *Vision Research, 41,* 3039–3050.

Merriam, E. P., Genovese, C. R., & Colby, C. L. (2003). Spatial updating in human parietal cortex. *Neuron, 39,* 361–373.

Morrone, M. C., Ross, J., & Burr, D. C. (1997). Apparent position of visual targets during real and simulated saccadic eye movements. *Journal of Neuroscience, 17,* 7941–7953.

Nakamura, K., & Colby, C. L. (2002). Updating of the visual representation in monkey striate and extrastriate cortex during saccades. *Proceedings of the National Academy of Sciences, U.S.A., 99,* 4026–4031.

Niemeier, M., Crawford, J. D., & Tweed, D. B. (2003). Optimal transsaccadic integration explains distorted spatial perception. *Nature, 422,* 76–80.

Pascual-Leone, A., Walsh, V., & Rothwell, J. (2000). Transcranial magnetic stimulation in cognitive neuroscience: Virtual lesion, chronometry, and functional connectivity. *Current Opinion in Neurobiology, 10,* 232–237.

Pierrot-Deseilligny, C., Milea, D., & Muri, R. M. (2004). Eye movement control by the cerebral cortex. *Current Opinion in Neurology, 17,* 17–25.

Pierrot-Deseilligny, C., Ploner, C. J., Muri, R. M., Gaymard, B., & Rivaud-Pechoux, S. (2002). Effects of cortical lesions on saccadic eye movements in humans. *Annals of the New York Academy of Sciences, 956,* 216–229.

Ro, T., Cheifet, S., Ingle, H., Shoup, R., & Rafal, R. (1999). Localization of the human frontal eye fields and motor hand area with transcranial magnetic stimulation and magnetic resonance imaging. *Neuropsychologia, 37,* 225–231.

Ro, T., Noser, E., Boake, C., Johnson, R., Gaber, M., Speroni, A., et al. (2006). Functional reorganization and recovery after constraint-induced movement therapy in subacute stroke: Case reports. *Neurocase, 12,* 50–60.

Ro, T., Wallace, R., Hagedorn, J., Farne, A., & Pienkos, E. (2004). Visual enhancing of tactile perception in the posterior parietal cortex. *Journal of Cognitive Neuroscience, 16,* 24–30.

Rossini, P. M., Barker, A. T., Berardelli, A., Caramia, M. D., Caruso, G., Cracco, R. Q., et al. (1994). Noninvasive electrical and magnetic stimulation of the brain, spinal-cord and roots: Basic principles and procedures for routine clinical-application. Report of an IFCN committee. *Electroencephalography and Clinical Neurophysiology, 91,* 79–92.

Rossini, P. M., Rossi, S., Tecchio, F., Pasqualetti, P., Finazzi-Agro, A., & Sabato, A. (1996). Focal brain stimulation in healthy humans: Motor maps changes following partial hand sensory deprivation. *Neuroscience Letters, 214,* 191–195.

Rossini, P. M., Tecchio, F., Sabato, A., Finazzi-Agro, A., Pasqualetti, P., & Rossi, S. (1996). The role of cutaneous inputs during magnetic transcranial stimulation. *Muscle and Nerve, 19,* 1302–1309.

Stark, L. (1976). Saccadic suppression of image displacement. *Vision Research, 16,* 1185–1187.

Stokes, M. G., Chambers, C. D., Gould, I. C., Henderson, T. R., Janko, N. E., Allen, N. B., et al. (2005). Simple metric for scaling motor threshold based on scalp–cortex distance: Application to studies using transcranial magnetic stimulation. *Journal of Neurophysiology, 94,* 4520–4527.

Terao, Y., Fukuda, H., Ugawa, Y., Hikosaka, O., Hanajima, R., Furubayashi, T., et al. (1998). Visualization of the information flow through human oculomotor cortical regions by transcranial magnetic stimulation. *Journal of Neurophysiology, 80,* 936–946.

Thilo, K. V., Santoro, L., Walsh, V., & Blakemore, C. (2004). The site of saccadic suppression. *Nature Neuroscience, 7,* 13–14.

Tootell, R. B. H., Reppas, J. B., Kwong, K. K., Malach, R., Born, R. T., Brady, T. J., et al. (1995). Functional-analysis of human MT and related visual cortical areas using magnetic resonance imaging. *Journal of Neuroscience, 15,* 3215–3230.

van Donkelaar, P., & Muri, R. (2001). Craniotopic updating of visual space across saccades in the human posterior parietal cortex. *Proceedings of the Royal Society of London, Series B, Biological Sciences, 269,* 735–739.

Volkmann, F. C. (1986). Human visual suppression. *Vision Research, 26,* 1401–1416.

Volkmann, F. C., Riggs, L. A., White, K. D., & Moore, R. K. (1978). Contrast sensitivity during saccadic eye movements. *Vision Research, 18,* 1193–1199.

von Helmholtz, H. (1925). *Helmholtz's treatise on physiological optics* (3rd ed., vol. 3, J. P. C. Southall, Trans.). New York: The Optical Society of America.

Watson, J. D. G., Myers, R., Frackowiak, R. S. J., Hajnal, J. V., Woods, R. P., Mazziotta, J. C., et al. (1993). Area V5 of the human brain: Evidence from a combined study using positron emission tomography and magnetic resonance imaging. *Cerebral Cortex, 3,* 79–94.

Williams, Z. M., Elfar, J. C., Eskandar, E. N., Toth, L. J., & Assad, J. A. (2003). Parietal activity and the perceived direction of ambiguous apparent motion. *Nature Neuroscience, 6,* 616–623.